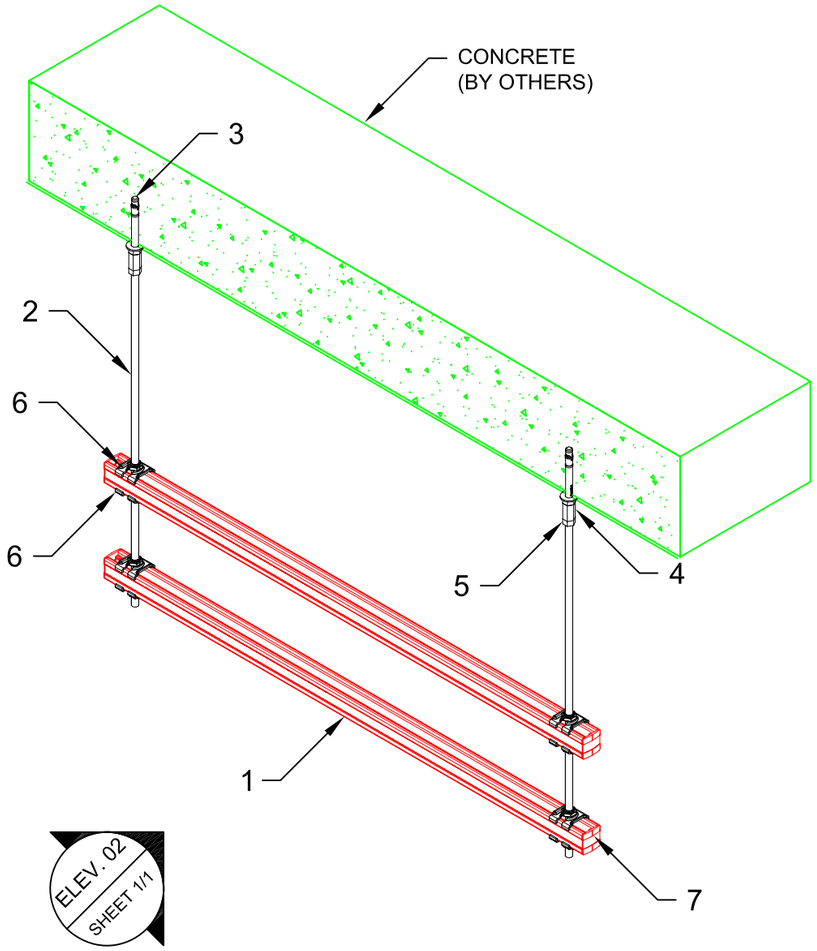

01 ISOMETRIC
N.T.S.

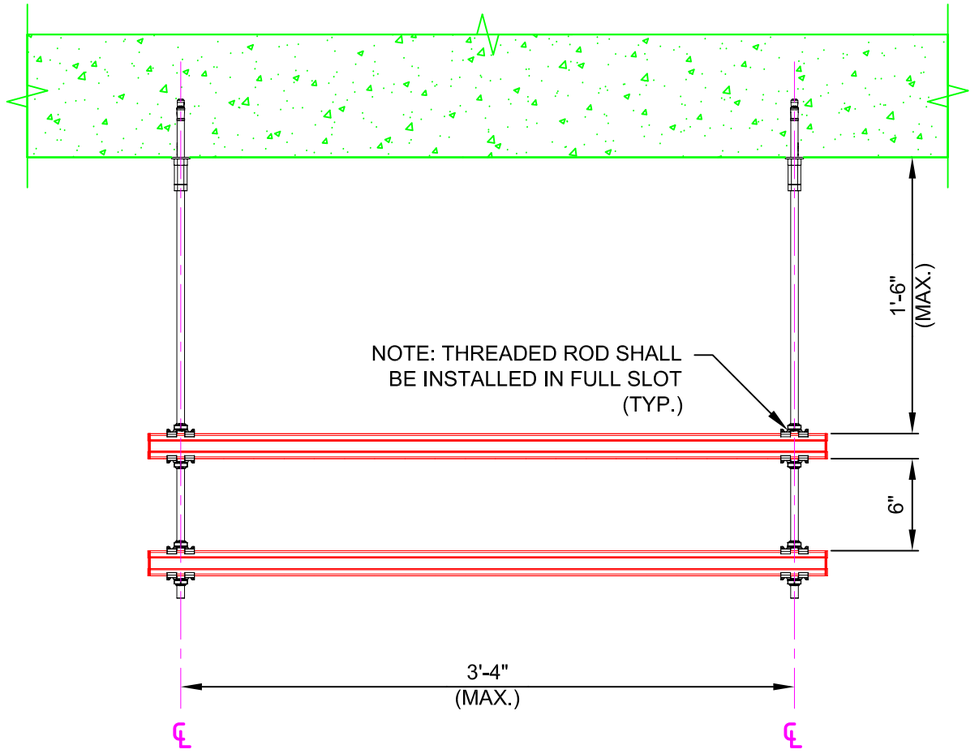

02 ELEVATION
N.T.S.

No.	Unit Qty	Unit	Description	Box Qty	# Boxes Needed	Item No.
1	AS REQ'D	EA	STRUT HS-158-12/PG 10'	1	AS REQ'D	407555
2	AS REQ'D	EA	THREADED ROD 1/2"-10' ZINC	12	AS REQ'D	309388
3	2	EA	STD STUD ANCHOR KB-TZ 1/2X4 1/2	20	1	387513
4	2	EA	1/2" ROD COUPLER	500	1	411748
5	2	EA	HEX NUT-HEAVY DUTY 1/2"	100	1	411753
6	8	EA	1/2" SPLIT NUT AND SLOT SQUARE WASHER	40	1	2008781
7	8	EA	CHANNEL END CAP MEK RED	50	1	244886

NOTE(S):
1. PRELIMINARY NOT FOR CONSTRUCTION
2. DESIGN ASSUMPTIONS:
   a. NO LOADS CONSIDERED - CONCEPT ONLY
   b. LATERAL LOADS NOT CONSIDERED
   c. BUILDING CODE: NOT SPECIFIED
   d. CORROSION RESISTANCE REQD.: NOT SPECIFIED
3. REFER TO COMPONENT MANUFACTURER'S IFUs FOR REQUIRED INSTALLATION INFO.
4. E.O.R. MUST BE NOTIFIED OF ANY DEVIATIONS FROM EXISTING/ NEW SUBSTRATE CONDITIONS SHOWN HEREIN TO VALIDATE ACCEPTANCE OF THIS HILTI DESIGN PRIOR TO INSTALLATION.

All loading and design criteria supplied by customer is assumed accurate. Only the stated Design Assumptions were considered, and must be verified by the responsible Engineer of Record (EOR). The basis of Hilti component and connection design is the published data in the current Hilti Technical Guide, including material and cross-section properties, allowable load values, factors of safety, methods of calculation, and limiting factors. The EOR must verify suitability for any specific application, and the capacity of the supportive structure to receive the shown configuration and associated reaction loads. Modification to components and/or design may alter performance and must be evaluated by the EOR.

TYPICAL DETAIL TYPE:
ELECTRICAL & INSTRUMENTATION APPLICATION

TYPICAL DETAIL DESCRIPTION:
TRAPEZE - DOUBLE

DESIGNED BY: KL
REVIEWED BY: AJV
DRAWN BY: GAB
ISSUE DATE: 08 DEC 14

REVISIONS:

NO:	DESCRIPTION:	DATE:
A	ORIGINAL ISSUE	08 DEC 14

TYPICAL DETAIL NOMENCLATURE:
EI-TR53-C

DRAWING NUMBER: 01
SHEET: 1/1

\\hilti.com\US\TEAMS\installations\Projects\TYPICALS\TYPICAL LIBRARY\ELECTRICAL & INSTRUMENTATION (E&I)\CAD\EI-TR53-C.dwg, 12/23/2014 9:24:39 AM