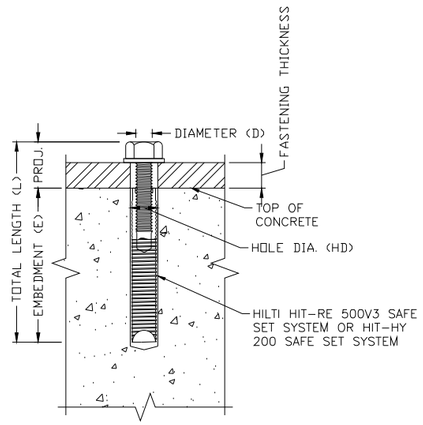

HILTI HIS-N

(SEE SCHEDULE)

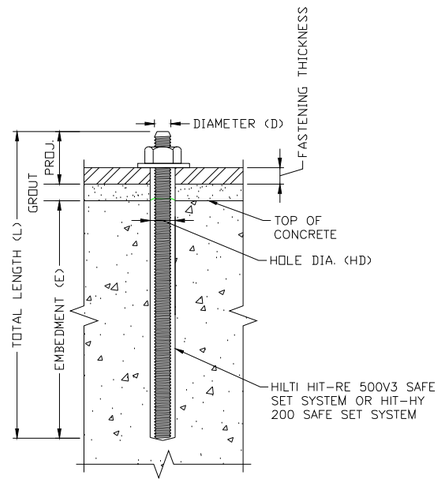

HILTI HAS ROD

(SEE SCHEDULE)

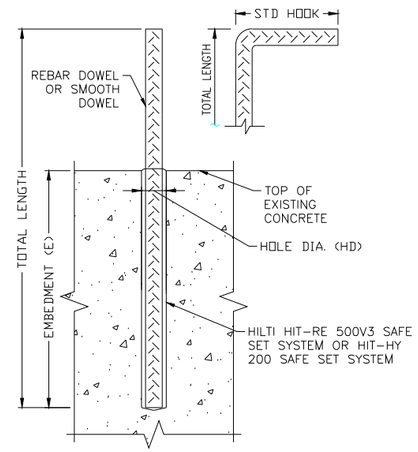

DOWEL BAR

(SEE SCHEDULE)

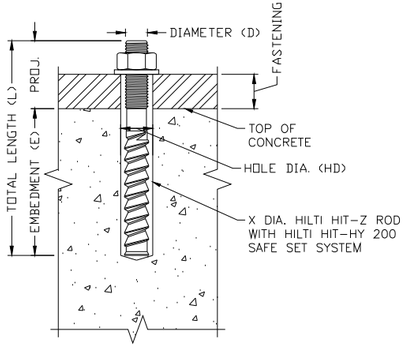

HILTI HIT-Z ROD

(SEE SCHEDULE)

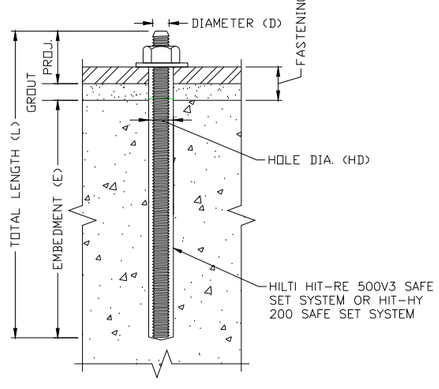

HILTI HIT-V ROD

(SEE SCHEDULE)

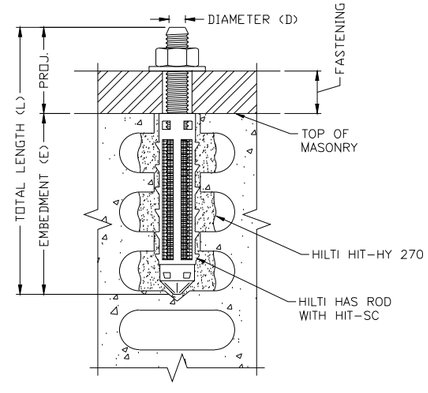

HILTI HAS ROD W/ HIT-SC

(SEE SCHEDULE)

GENERAL NOTES FOR POST-INSTALLED ANCHORS

1)EXCEPT WHERE INDICATED ON THE DRAWINGS, POST-INSTALLED ANCHORS SHALL CONSIST OF THE FOLLOWING ANCHOR TYPES AS PROVIDED BY HILTI, INC. CONTACT HILTI AT (800) 363-4458 FOR PRODUCT RELATED QUESTIONS.

a)ANCHORAGE TO CONCRETE

i) ADHESIVE ANCHORS FOR CRACKED AND UNCRACKED CONCRETE USE:
(1) HILTI HIT-HY 200 SAFE SET SYSTEM WITH THE HILTI HIT-Z ROD PER ICC ESR-3187
(2) HILTI HIT-HY 200 SAFE SET SYSTEM WITH HILTI HOLLOW DRILL BIT (TE-CD OR TE-YD) AND VC 150/300 VACUUM (VC 20/40) SYSTEM WITH HAS-E THREADED ROD PER ICC ESR-3187
(3) HILTI HIT-RE 500 V3 SAFE SET SYSTEM WITH HILTI HOLLOW DRILL BIT (TE-CD OR TE-YD) AND VC 150/300 VACUUM (VC 20/40) WITH HAS-E THREADED ROD PER ICC ESR-3814
(4) HILTI HIT-RE 500 V3 SAFE SET SYSTEM WITH HILTI ROUGHENING TOOL (TE-YRT) WITH HAS-E THREADED ROD PER ICC ESR-3814 FOR DIAMOND CORED HOLES

ii)MEDIUM DUTY MECHANICAL ANCHORS FOR CRACKED AND UNCRACKED CONCRETE USE:
(1) HILTI KWIK HUS-EZ, KWIK HUS-EZ I, KWIK HUS-EZ P, AND KWIK HUS-EZ E SCREW ANCHORS PER ICC ESR-3027.
(2) HILTI KWIK BOLT-TZ EXPANSION ANCHORS PER ICC ESR-1917
(3) HILTI KWIK BOLT-TZ EXPANSION ANCHORS DIAMETERS 3/8", 1/2" AND 5/8" WITH HILTI ADAPTIVE TORQUE SYSTEM (SIW-6AT-A22 Impact Wrench Tool body and SI-AT-A22 Adaptive Torque Module) PER ICC ESR-1917
(4) HILTI KWIK BOLT 3 EXPANSION ANCHORS (UNCRACKED CONCRETE ONLY) PER ICC ESR-2302
(5) HILTI KWIK BOLT 3 EXPANSION ANCHORS DIAMETERS 3/8", 1/2" AND 5/8" WITH HILTI ADAPTIVE TORQUE SYSTEM (SIW-6AT-A22 Impact Wrench Tool body and SI-AT-A22 Adaptive Torque Module) (UNCRACKED CONCRETE ONLY) PER ICC ESR-2302

iii) HEAVY DUTY MECHANICAL ANCHORS FOR CRACKED AND UNCRACKED CONCRETE USE:
(1) HILTI HDA UNDERCUT ANCHORS PER ICC ESR 1546
(2) HILTI HSL-3 EXPANSION ANCHORS PER ICC ESR 1545

b)REBAR DOWELING INTO CONCRETE

i) ADHESIVE ANCHORS FOR CRACKED AND UNCRACKED CONCRETE USE:
(1) HILTI HIT-HY 200 SAFE SET SYSTEM WITH HILTI HOLLOW DRILL BIT (TE-CD OR TE-YD) AND VC 150/300 VACUUM (VC 20/40) SYSTEM WITH CONTINUOUSLY DEFORMED REBAR PER ICC ESR-3187
(2) HILTI HIT-HY 500 V3 SAFE SET SYSTEM WITH HILTI HOLLOW DRILL BIT (TE-CD OR TE-YD) AND VC 150/300 VACUUM (VC 20/40) SYSTEM WITH CONTINUOUSLY DEFORMED REBAR PER ICC ESR-3814
(3) HILTI HIT-RE 500 V3 SAFE SET SYSTEM WITH HILTI ROUGHENING TOOL (TE-YRT) WITH CONTINUOUSLY DEFORMED REBAR PER ICC ESR-3814 IN DIAMOND CORED HOLES

c)ANCHORAGE TO SOLID GROUTED MASONRY

i) ADHESIVE ANCHORS USE:
(1) HILTI HIT-HY 270 MASONRY ADHESIVE ANCHORING SYSTEM PER ICC ESR-4143.
(2) STEEL ANCHOR ELEMENT SHALL BE HILTI HAS-E CONTINUOUSLY THREADED ROD OR CONTINUOUSLY DEFORMED STEEL REBAR

ii)MECHANICAL ANCHORS USE:
(1) HILTI KWIK BOLT-3 EXPANSION ANCHORS PER ICC ESR 1385

d)ANCHORAGE TO HOLLOW / MULTI-WYTHE MASONRY

i) ADHESIVE ANCHORS USE:
(1) HILTI HIT-HY 270 MASONRY ADHESIVE ANCHORING SYSTEM PER ICC ESR-4144.
(2) STEEL ANCHOR ELEMENT SHALL BE HILTI HAS-E CONTINUOUSLY THREADED ROD OR CONTINUOUSLY DEFORMED STEEL REBAR
(3) THE APPROPRIATE SIZE SCREEN TUBE SHALL BE USED PER ADHESIVE MANUFACTURER'S RECOMMENDATION

2)ANCHOR CAPACITY USED IN DESIGN SHALL BE BASED ON THE TECHNICAL DATA PUBLISHED BY HILTI OR SUCH OTHER METHOD AS APPROVED BY THE STRUCTURAL ENGINEER OF RECORD. SUBSTITUTION REQUESTS FOR ALTERNATE PRODUCTS MUST BE APPROVED IN WRITING BY THE STRUCTURAL ENGINEER OF RECORD PRIOR TO USE. CONTRACTOR SHALL PROVIDE CALCULATIONS DEMONSTRATING THAT THE SUBSTITUTED PRODUCT IS CAPABLE OF ACHIEVING THE PERFORMANCE VALUES OF THE SPECIFIED PRODUCT. SUBSTITUTIONS WILL BE EVALUATED BY THEIR HAVING AN ICC ESR/ESL SHOWING COMPLIANCE WITH THE RELEVANT BUILDING CODE FOR SEISMIC USES, LOAD RESISTANCE, INSTALLATION CATEGORY, AND AVAILABILITY OF COMPREHENSIVE INSTALLATION INSTRUCTIONS. ADHESIVE ANCHOR EVALUATION WILL ALSO CONSIDER CREEP, IN-SERVICE TEMPERATURE AND INSTALLATION TEMPERATURE.

3)INSTALL ANCHORS PER THE MANUFACTURER INSTRUCTIONS, AS INCLUDED IN THE ANCHOR PACKAGING.

4)OVERHEAD ADHESIVE ANCHORS MUST BE INSTALLED USING THE HILTI PROFI SYSTEM.

5)THE CONTRACTOR SHALL ARRANGE AN ANCHOR MANUFACTURER'S REPRESENTATIVE TO PROVIDE ONSITE INSTALLATION TRAINING FOR ALL OF THEIR ANCHORING PRODUCTS SPECIFIED. THE STRUCTURAL ENGINEER OF RECORD MUST RECEIVE DOCUMENTED CONFIRMATION THAT ALL OF THE CONTRACTOR'S PERSONNEL WHO INSTALL ANCHORS ARE TRAINED PRIOR TO THE COMMENCEMENT OF INSTALLING ANCHORS.

6)ANCHOR CAPACITY IS DEPENDANT UPON SPACING BETWEEN ADJACENT ANCHORS AND PROXIMITY OF ANCHORS TO EDGE OF CONCRETE. INSTALL ANCHORS IN ACCORDANCE WITH SPACING AND EDGE CLEARANCES INDICATED ON THE DRAWINGS.

7)EXISTING REINFORCING BARS IN THE CONCRETE STRUCTURE MAY CONFLICT WITH SPECIFIC ANCHOR LOCATIONS. UNLESS NOTED ON THE DRAWINGS THAT THE BARS CAN BE CUT, THE CONTRACTOR SHALL REVIEW THE EXISTING STRUCTURAL DRAWINGS AND SHALL UNDERTAKE TO LOCATE THE POSITION OF THE REINFORCING BARS AT THE LOCATIONS OF THE CONCRETE ANCHORS, BY HILTI FERROSCAN, HILTI PS 1000, GPR, X-RAY, CHIPPING OR OTHER APPROVED MEANS.

CONTRACT NO	DWG NO	REV.	SCALE:

REFERENCE DRAWINGS

DWG NO	TITLE	DWG NO	TITLE

NO	REVISION	BY	CHK	APP	DATE	NO	REVISION	BY	CHK	APP	DATE

DRAWN: DATE:
CHECKED:
APPROVED:
APPROVED:

SEAL:

DWG TITLE